F Series Two & Three-Phase 100 Amp Solid State Power Controller

- SCR output, two and three-phase panel mount solid-state relay Power Controller
- Output ratings up-to 100 amps per-phase @ 40°C ambient temperature
- Forced-air cooled heat sink to maximize overall product life expectancy
- Includes 90°C thermal cutout switch
- Direct-bond copper (DBC) substrate for superior thermal performance
- Epoxy free design eliminates stress on internal components due to epoxy expansion and contraction
- Ideal replacement for mercury three-phase contactors
- MTBF > 7 million hours (>800 years)
- Touch-safe cover
- EMC compliant, level 3
- Agency approvals (SSR and Fan); UL, CSA, VDE/TUV, and CE

Series Nomenclature

Controller Type
HBC: Standard On/Off Controller
TP: Burst Fire Controller
TPLP: Burst Fire Loop Controller
LPC: Phase-Angle Controller

Input/Control Voltage
D: 4–32 Vdc
A: 90-280Vac

Output
2: Three-Phase / Two-Pole
3: Three-Phase / Three-Pole

HBC – 90 D F 2 I

Rated Load Current
90: 0.15 – 80 Amps Per-Phase
125: 0.15 – 100 Amps Per-Phase

Series
F: Power Controller with F Series Heat Sink

Fan Voltage
I: 24 Vdc
B: 120Vac
C: 240Vac

Output Specifications

Part Number: HBC -	90xF2x	125xF2x	90xF3x	125xF3x
Operating Voltage (Vrms; 47-440Hz)	48-530	48-530	48-530	48-530
Load Current Range (Amps RMS Per--Phase)	.15 - 80	.15 - 100	.15 - 80	.15 - 100
Transient Overvoltage (Vpk)	1200	1200	1200	1200
Max. Surge Current (Apk; 50/60Hz)	1145/1200	1670/1750	1145/1200	1670/1750
Max. On-State Voltage Drop (Vrms)	1.15	1.15	1.15	1.15
Max I^2T for Fusing (A^2S; 50/60Hz)	6560/5976	13950/12709	6560/5976	13950/12709
Max. Off-State Leakage Current (mArms)	1	1	1	1
Min. Power Factor with Max. Load	0.5	0.5	0.5	0.5

Thermal Devices, Inc. Mount Airy, Maryland USA 301-831-7550 www.thermaldevices.com

F Series Two & Three-Phase 100 Amp Solid State Power Controller

Input Specifications

Part Number:	HBC-xxDFxx	HBC-xxAFxx
Control Voltage Range	4-32Vdc	90-280Vac
Minimum Turn-On Voltage	4Vdc	90Vac
Must Turn-Off Voltage	1Vdc	10Vrms
Input Current Range (mA)	7 - 12	5 - 10
Nominal Input Impedance	Current Regulated	
Maximum Turn-On / Turn-Off Time (msec)	½ AC Cycle	20 / 30

General Specifications

Description	Specification
Dielectric Strength (Input/Output/Heat Sink)	4,000 Vrms
Ambient Operating Temperature Range	-40 to +80 °C
Weight *	4.1 lbs (1.86 kg) (2-phase) / 4.3 lbs (1.95 kg) (3-phase)
Solid State Relay Housing Material	UL94 V-0 Polymers
Heat Sink Material	Aluminum
Input Terminal Screw Torque Range (in-lb/Nm)	13-15 /1.5-1.7
Load Terminal Screw Torque Range (in-lb/Nm)	18-20 / 2.0-2.2
MTBF (Mean Time Between Failures) @ 40°C ambient	~11 Million Hours (>1,300 years)
MTBF (Mean Time Between Failures) @ 60°C ambient	~7 Million Hours (>800 years)

*** Weight given for "I" version with a 24Vdc fan. Add 0.8 lbs (363 g) for "B" or "C" version (120Vac or 240Vac fan, respectively)**

Available Options

-10 Random/Instantaneous turn-on (inductive or phase-control applications)
-M MOV (metal oxide varistor) overvoltage protection
-P Internal TVS overvoltage protection
-Z LED input status indicator
-E 24Vac control voltage (AC input only)
-TP Through-panel mounting
-CT Current transducer
-WH Wiring harness for multiple pole configurations

Input Options (Change HBC- prefix to TP, TPLP or LPC prefix)

TP Burst fire (time proportioning) controller. Analog Input; 0-10Vdc, 0-5Vdc, 2-10Vdc, 1-5Vdc, 4-20mA, potentiometer or 0-135Ω rheostat (TP135 prefix). 24Vac power supply required (optional HBControls PS series if 24Vac supply is not available)

TPLP Burst fire loop (time proportioning loop) controller. Analog Input; 4-20mA (24Vac supply not required)

LPC Linear phase-angle controller. Analog Input; 0-10Vdc, 0-5Vdc, 2-10Vdc, 1-5Vdc, 4-20mA, potentiometer or 0-135Ω rheostat (LPC135 prefix). 24Vac power supply required (optional HBControls PS series if 24Vac supply is not available)

F Series Two & Three-Phase
100 Amp Solid State Power Controller

FRONT

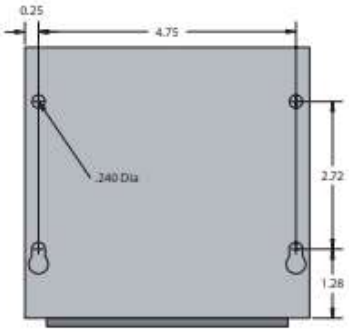

REAR

3 Phase /
2 Pole
Ex: HBC-125DF2B

3 Phase /
3 Pole
Ex: HBC-125DF2B

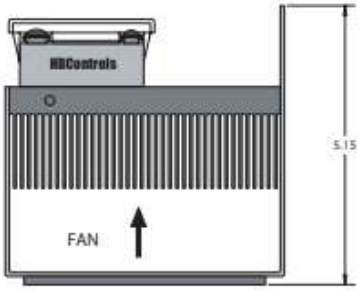

SIDE

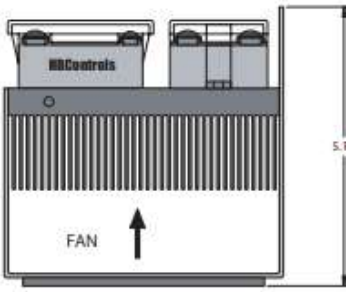

SIDE

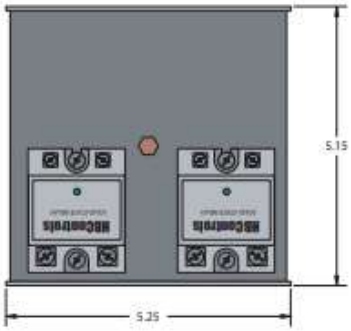

TOP

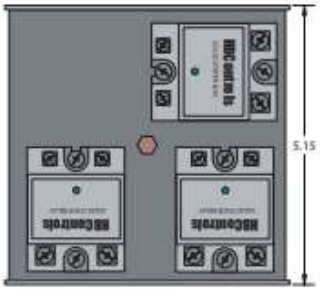

TOP

Thermal Devices, Inc. Mount Airy, Maryland USA 301-831-7550 www.thermaldevices.com